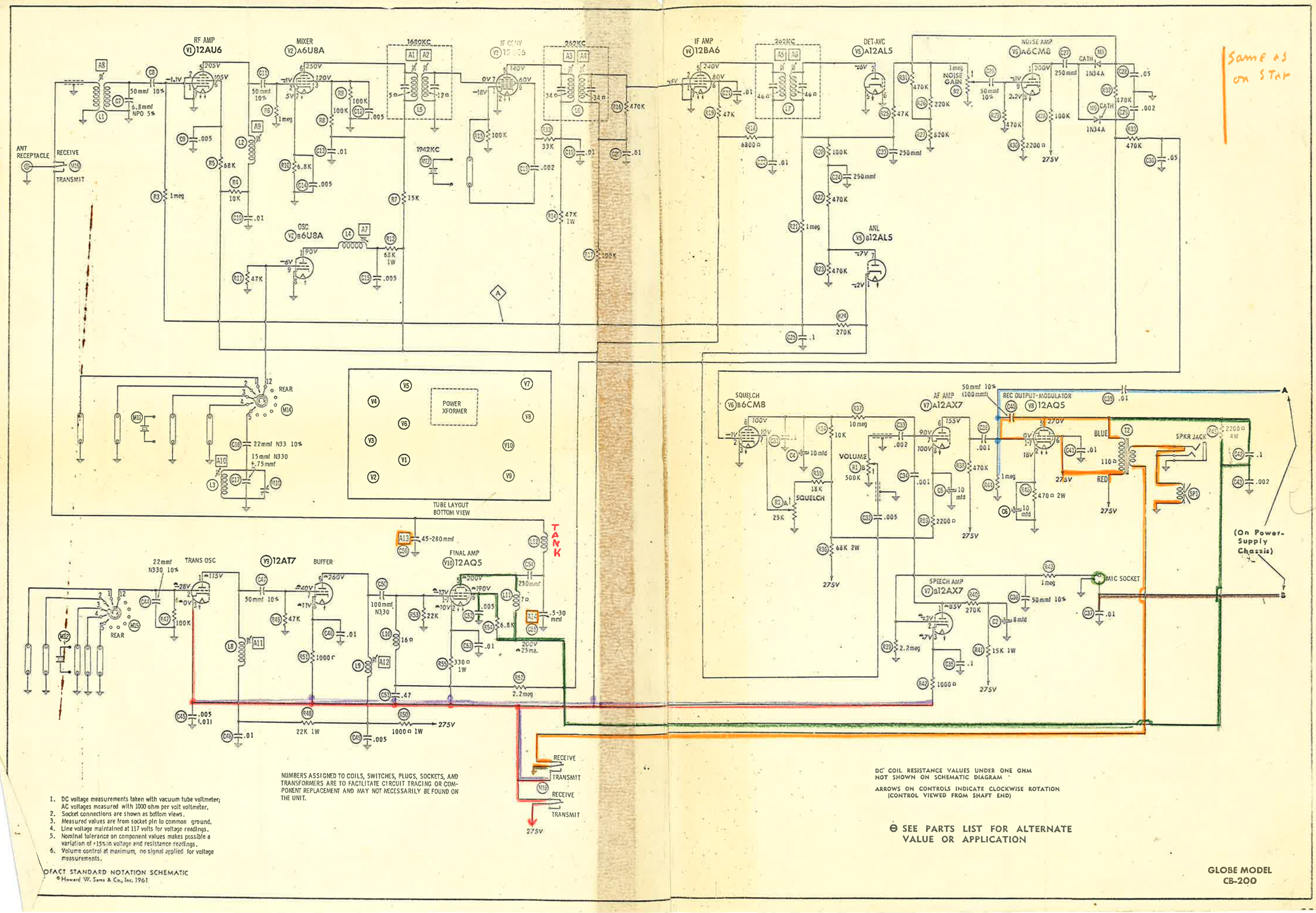

1. DC voltage measurements taken with vacuum tube voltmeter; AC voltages measured with 1000 ohm per volt voltmeter.
2. Socket connections are shown as bottom views.
3. Measured values are from socket pin to common ground.
4. Line voltage maintained at 117 volts for voltage readings.
5. Nominal tolerance on component values makes possible a variation of ±15% in voltage and resistance readings.
6. Volume control at maximum, no signal applied for voltage measurements.

NUMBERS ASSIGNED TO COILS, SWITCHES, PLUGS, SOCKETS, AND TRANSFORMERS ARE TO FACILITATE CIRCUIT TRACING OR COMPONENT REPLACEMENT AND MAY NOT NECESSARILY BE FOUND ON THE UNIT.

DC COIL RESISTANCE VALUES UNDER ONE OHM NOT SHOWN ON SCHEMATIC DIAGRAM

ARROWS ON CONTROLS INDICATE CLOCKWISE ROTATION (CONTROL VIEWED FROM SHAFT END)

⊖ SEE PARTS LIST FOR ALTERNATE VALUE OR APPLICATION

OFACT STANDARD NOTATION SCHEMATIC

© Howard W. Sams & Co., Inc. 1961

GLOBE MODEL CB-200